SIZE	A	B*	MANDREL O.D. PSM (SDR-26)	RING O.D. PSM (SDR-26)
6"	4.0"	4.5"	5.50	4.79
8"	5.5"	6.0"	7.37	6.66
10"	7.0"	7.5"	9.21	8.50
12"	8.0"	9.0"	10.96	10.25
15"	10.0"	11.0"	13.42	12.71
18"	12.0"	13.5"	—	—
21"	14.0"	16.0"	—	—
*24"	16.0"	18.0"	—	—
27"	18.0"	20.0"	—	—

MINIMUM LENGTH

CHART

NOTES:
PVC PIPES AND FITTINGS SIX INCHES (6") TO FIFTEEN INCHES (15") IN DIAMETER SHALL CONFORM TO ASTM D-3034.
PVC PIPES AND FITTINGS EIGHTEEN INCHES (18") TO TWENTY-SEVEN INCHES (27") IN DIAMETER SHALL CONFORM TO ASTM F-679.
THIS INFORMATION IS PROVIDED AS A REFERENCE. ALL DEFLECTION TESTING SHALL BE DONE IN ACCORDANCE WITH TCEQ RULES AND REGULATIONS, TAC TITLE 30 PART I CHAPTER 217.57.

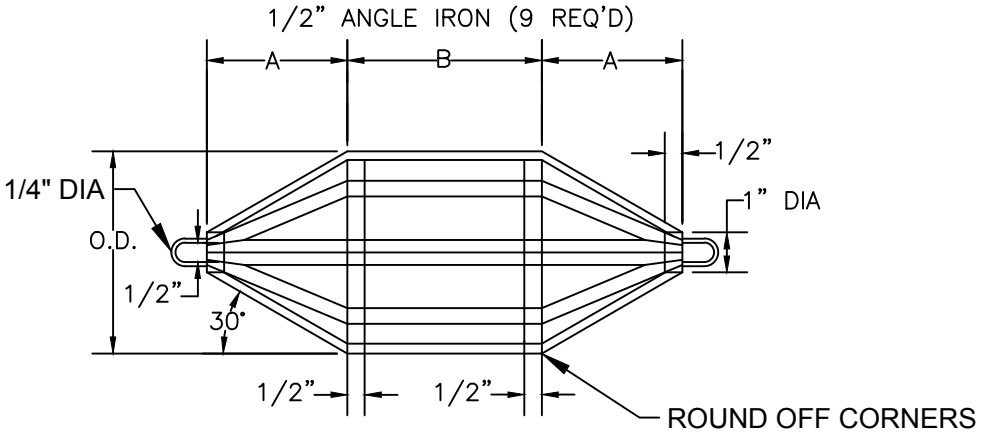

SIDE OR TOP VIEW

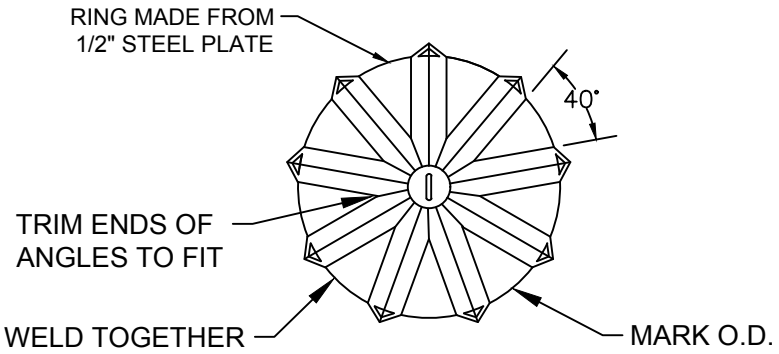

END VIEW

NOTE:
ALL MANDRELS MUST BE APPROVED BY CONSTRUCTION INSPECTIONS AND STAMPED BEFORE USE.

SCHERTZ
COMMUNITY ★ SERVICE ★ OPPORTUNITY

DEFLECTION TESTING MANDREL

TECHNICAL SPECIFICATION SECTION 02260

ENGINEERING AND PUBLIC WORKS	SCALE: N.T.S.		DATE: 5/10/19
	DSGN. BY: ENG.	DRAWN BY: BCP	SHEET NO.: 1

L:\Engineer\Standard Details and Technical Specifications\Standard Details\2019\WW\STANDARD SEWER DETAILS 04_2019.dwg